SALES DRAWING SALES DRAWING

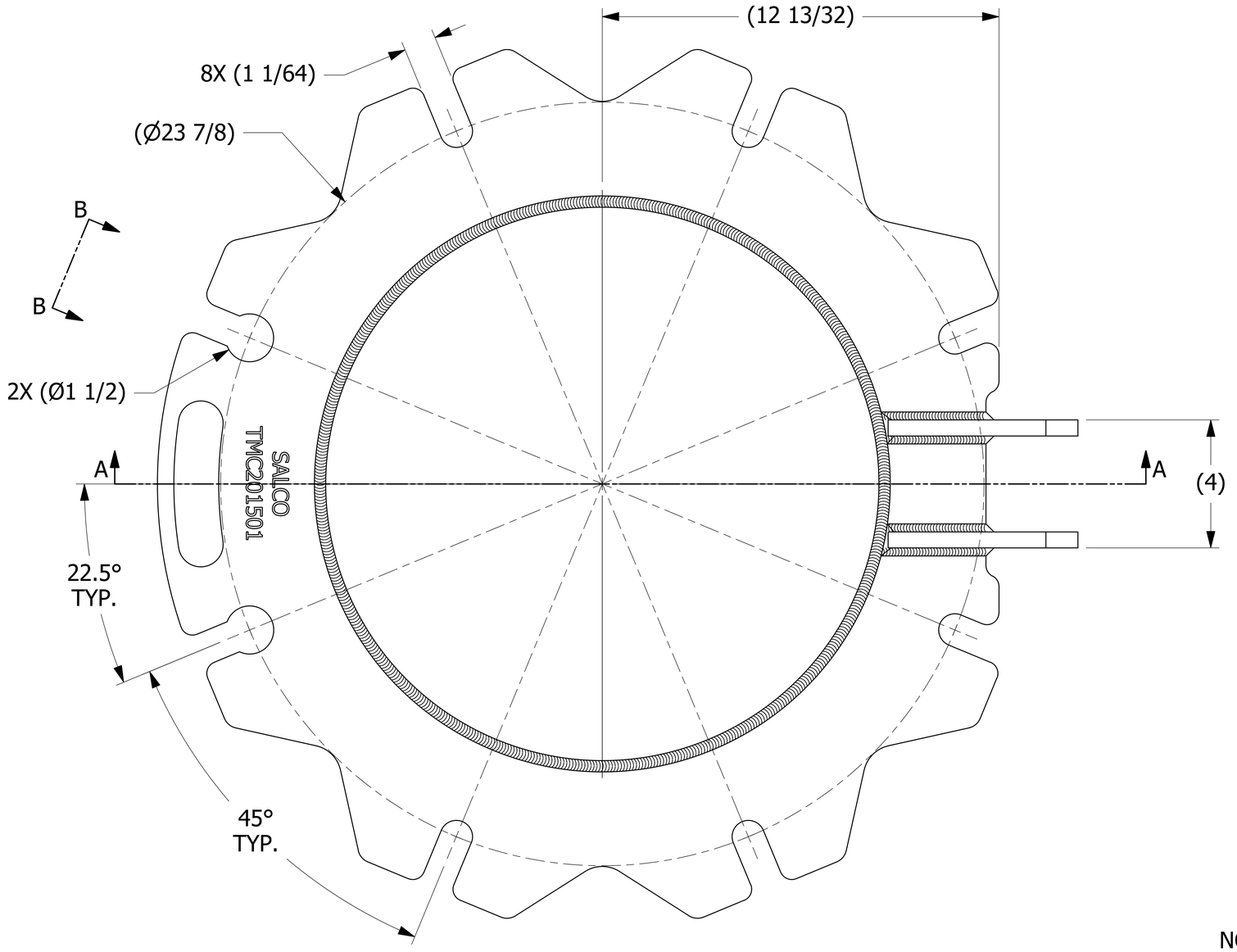

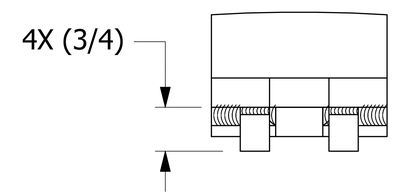

VIEW B-B
SCALE 1 : 1

NOTE:
AAR APPROVAL # E-182113.

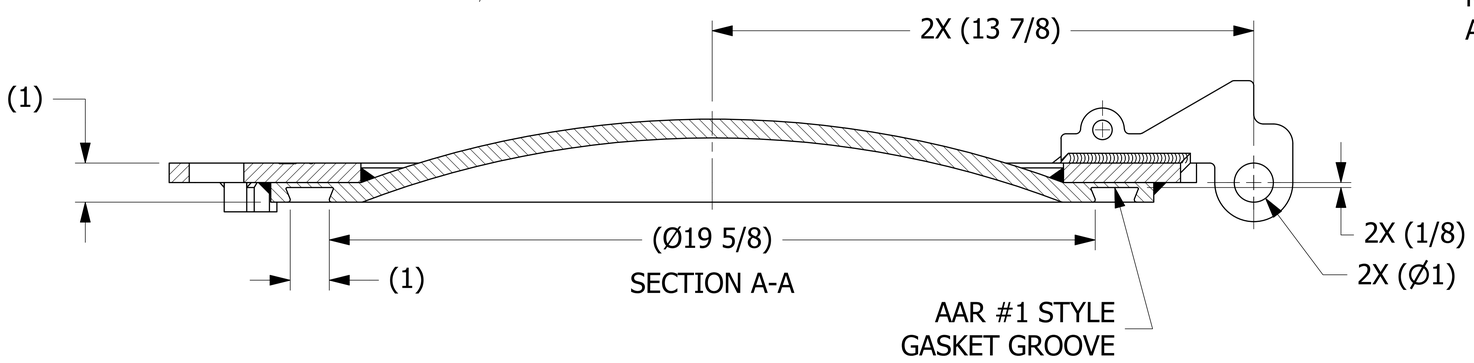

SECTION A-A

REV	BY	DATE	DESCRIPTION
D	WEB	5-14-19	REMOVED QAP4A-1 NOTE; Q-2.15.7 WAS QAP4C-1; D-008 WAS DSS 12; ADDED D-005 NOTE; AAR # WAS E-089005
C	RJP	11-16-17	HINGE WELD WAS 3/8"; 4.00 +.00/-.06 WAS 4.00; ADDED NOTE 6; ADDED "SALCO" TO ENGRAVING; UPDATED WELD NOTE TO DSS 12
B	JG	8-16-16	REPLACED TMCDSC1MF & TMCR201C1 W/ TMCDR2015; A44194 WAS A29293; UPDATED NOTES, VIEWS
A	JG	6-28-16	RELEASED FOR PRODUCTION

UNLESS OTHERWISE SPECIFIED
DIMENSIONAL TOLERANCES
FRACTIONAL: ±1/16
X.XX: ±.03
X.XXX: ±.015
ANGULAR: ±1°
DEBURR ALL SHARP EDGES.
ALL MACHINED SURFACES TO HAVE A 125 RMS FINISH UNLESS NOTED OTHERWISE.
THIRD ANGLE PROJECTION

DRAWN BY:	RJP
CHECKED BY:	JRO
PROTOTYPE BY:	RJP
PROTOTYPE DATE:	6/7/2016
APPROVED FOR PRODUCTION BY:	EJF
PRODUCTION DATE:	6/28/2016

SALCO PRODUCTS, INC.

PART NAME: MANWAY COVER 20" 8-BOLT

MATERIAL: CARBON STEEL

PROJECT #: R160606 | SHEET #: 1 OF 1 | SCALE: 2:3

DRAWING #: E43818 | PART #: TMC201501

THIS PRINT, PROPERTY OF SALCO PRODUCTS INC, CONTAINS PROPRIETARY INFORMATION AND MUST NOT BE COPIED, REPRODUCED, OR USED DETRIMENTALLY TO OUR INTEREST.

SALES DRAWING SALES DRAWING